SAMSUNG CONFIDENTIAL
THIS DOCUMENT CONTAINS CONFIDENTIAL
PROPRIETARY INFORMATION THAT IS
SAMSUNG ELECTRONICS CO'S PROPERTY.
DO NOT DISCLOSE TO OR DUPLICATE FOR OTHERS
EXCEPT AS AUTHORIZED BY SAMSUNG.

SM-A245F_REV0.3A

SM-A245F/M_COMMON

2022.12.13

Sheet01 : GSM / WCDMA / LTE
Sheet02 : TRANSCEIVER, SUB ANT
Sheet03 : CONNECTIVITY(BT/WIFI/FM), NFC
Sheet04 : AP(MT6789)
Sheet05 : AP(POWER), MEM(uMCP)
Sheet06 : PMIC(MT6366), IF PMIC
Sheet07 : AUDIO Codec, SENSOR, SIM, SD
Sheet08 : CAMERA
Sheet09 : DISPLAY PMIC, C2C

SAMSUNG CONFIDENTIAL
THIS DOCUMENT CONTAINS CONFIDENTIAL
AND PROPRIETARY INFORMATION OF
SAMSUNG ELECTRONICS. THIS PROPERTY
DO NOT DISCLOSE TO OR DUPLICATE FOR OTHERS
EXCEPT AS AUTHORIZED BY SAMSUNG.

	CIS/EUR/MEA/AFR/SEA/SWA	LATIN	KOR
FDD	1/ 3/ 5/ 7/ 8/ 20/28	1/ 2/ 3/ 4/ 5/ 7/ 8/ 12/ 13/ 17/ 26/ 28/ 66	1/ 2/ 3/ 4/ 5/ 7/ 8/ 12/ 17/ 20/ 26/ 28/ 66
TDD	38/ 40/ 41	38/ 40/ 41	38/ 40/ 41
3G	1/ 5/ 8	1/ 2/ 4/ 5/ 8	1/ 2/ 4/ 5/ 8
2G	850/ 900/ 1800/ 1900	850/ 900/ 1800/ 1900	850/ 900/ 1800/ 1900

MAIN ANT1 LOW BAMD

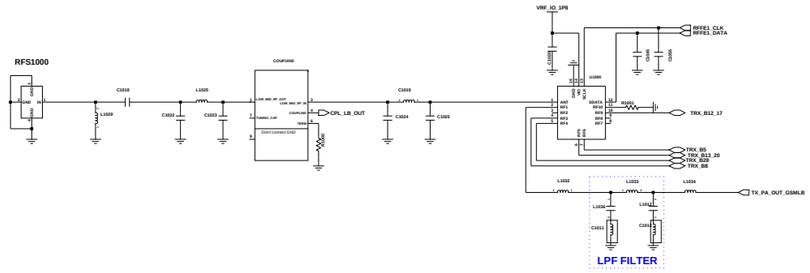

MAIN ANT2

MID/ HIGH BAND

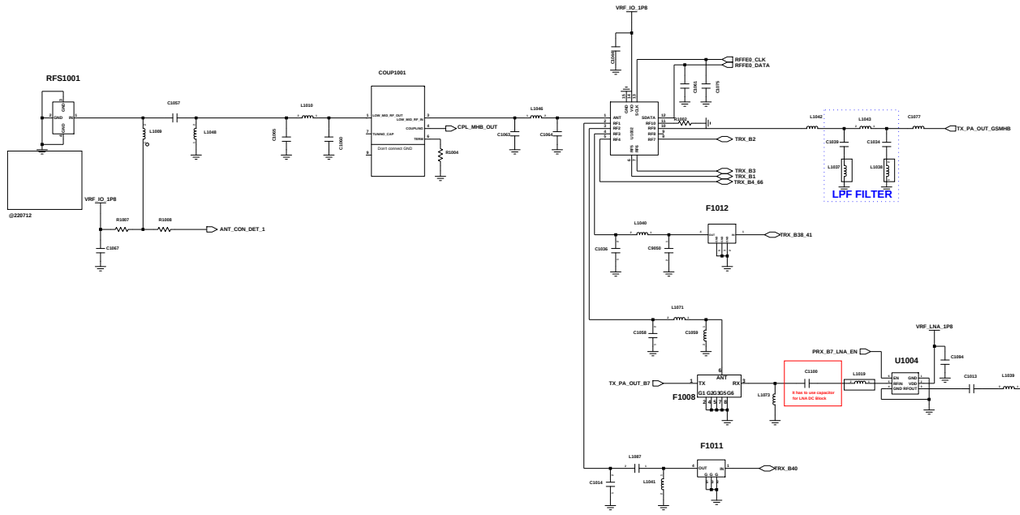

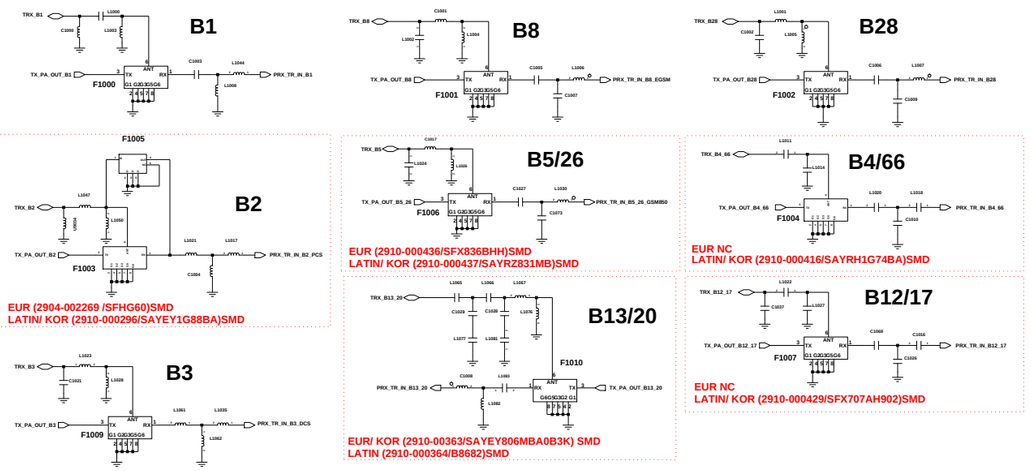

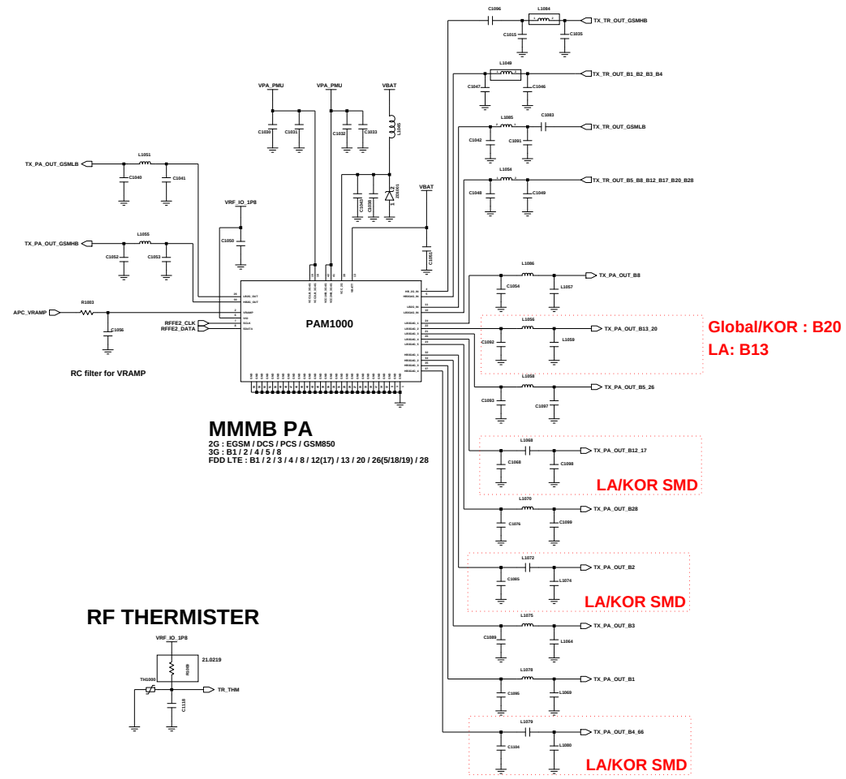

MMMB PA

2G : EGSM / DCS / PCS / GSM850
3G : B1 / 2 / 4 / 5 / 8
FDD LTE : B1 / 2 / 3 / 4 / 8 / 12(17) / 13 / 20 / 26(5/18/19) / 28

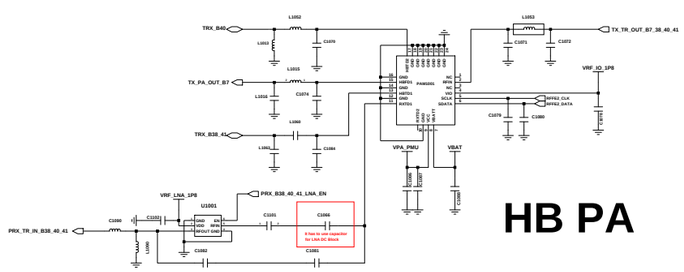

HB PA

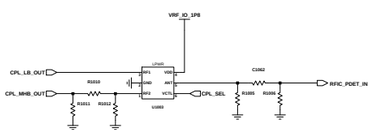

RF THERMISTER

Engineer:	A24 LTE_NEXT_G
Drawn by:	
R&D CHK:	TITLE: RF
DOC CTRL CHK:	
MFG DOCS CHK:	
QA CHK:	

Changed by: | Date Changed: | Time Changed: | REV | Drawing Number: | Size

SAMSUNG CONFIDENTIAL
THIS DOCUMENT CONTAINS CONFIDENTIAL
PROPRIETARY INFORMATION THAT IS
SAMSUNG ELECTRONICS CO'S PROPERTY.
DO NOT DISCLOSE TO OR DUPLICATE FOR OTHERS
EXCEPT AS AUTHORIZED BY SAMSUNG.

SUB ANT1

LMHB DRX

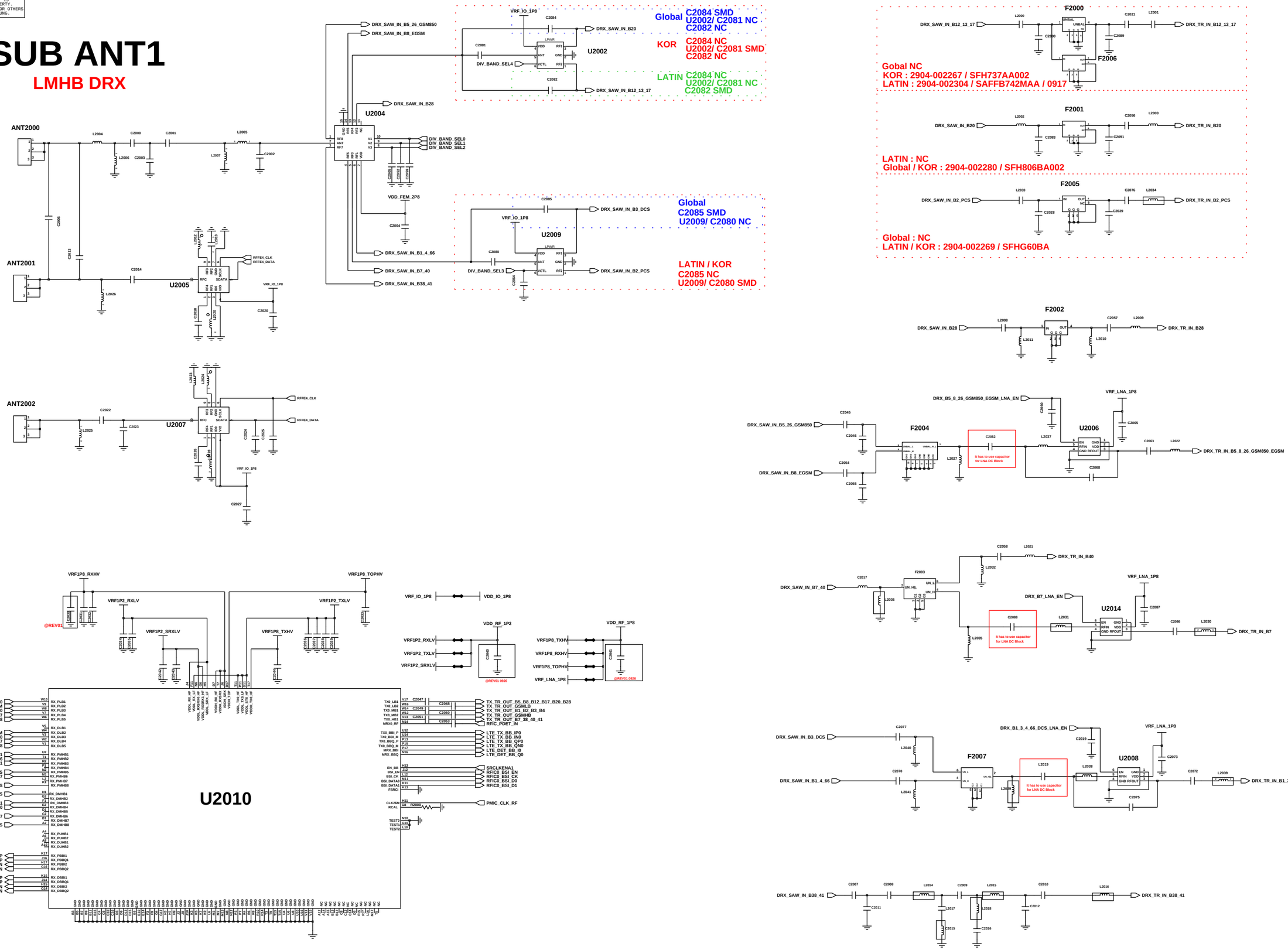

Changed by:	Date Changed:	Time Changed:	QA CHK:	REV	Drawing Number:	Page:
kimphan.lin	Monday, February 28, 2022	3:39:03 pm				2

Engineer:
RDE:
Drawn by:
RFC:
R&D CHK:
DOC CTRL CHK:
MFG ENGR CHK:

TITLE: A24_LTE NEXT_G

RF2

Size: 16 1 12 A

SAMSUNG CONFIDENTIAL
THIS DOCUMENT CONTAINS CONFIDENTIAL
PROPRIETARY INFORMATION THAT IS
SAMSUNG ELECTRONICS CO'S PROPERTY.
DO NOT DISCLOSE TO OR DUPLICATE FOR OTHERS
EXCEPT AS AUTHORIZED BY SAMSUNG.

WIFI/BT/FM

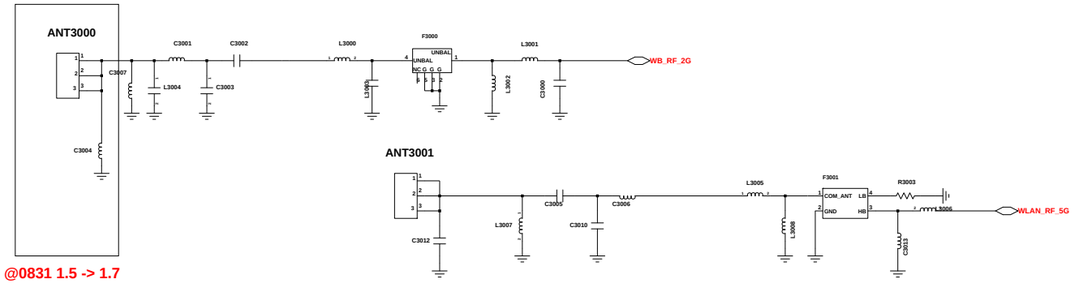

@0831 1.5 -> 1.7

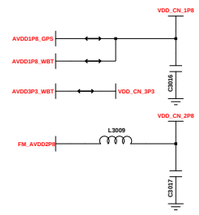

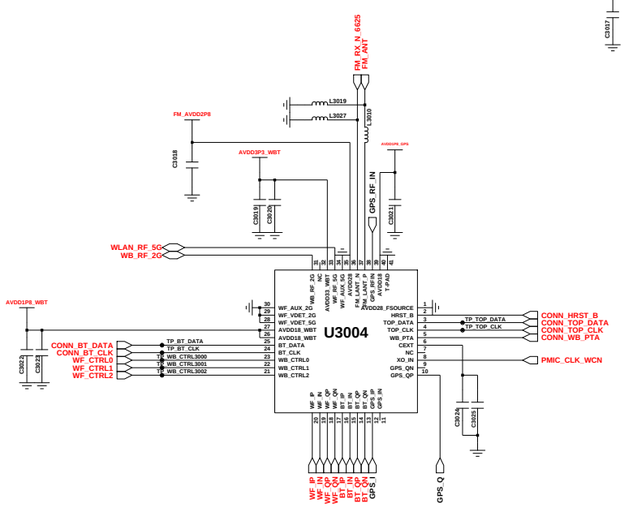

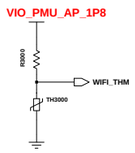

DRX MHB /GPS L1 /GNSS /BEIDOU

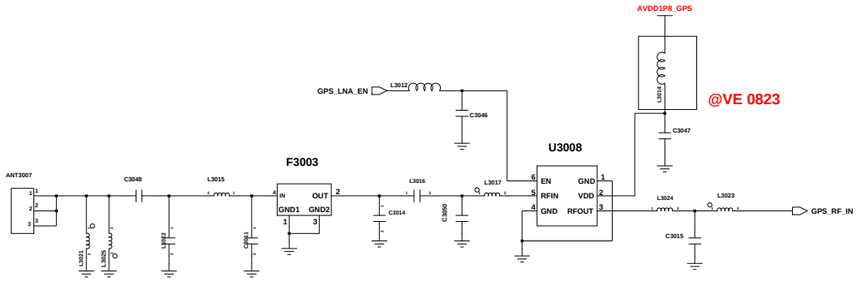

@VE 0823

MST

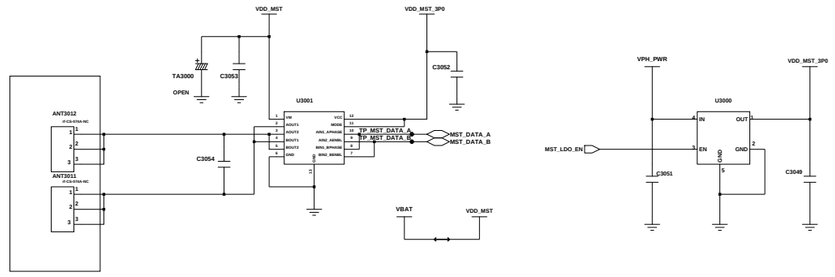

@0831 1.5 -> 2.0

KOR : ONLY USE

GND CCP

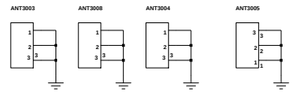

NFC(OPTION)

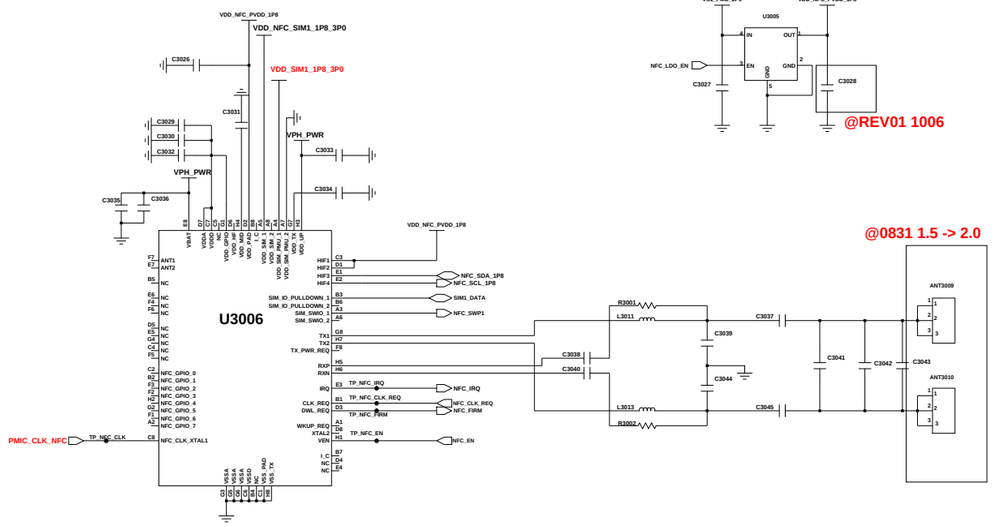

@REV01 1006

@0831 1.5 -> 2.0

	NFC	NFC PART	Power supply of SIM1		NFC GPIO	
		u3006	R7009	R7010	R4022	R4025
CIS/MEA/SEA/LA/KOR	NFC	CONNECT	short	open	10K ohm	open
SWA	nonNFC	NC	open	short	open	10K ohm

Engineer:	A24 LTE_NEXT_G		
Drawn by:			
R&D CHK:	TITLE: WIFI/NFC/GPS	Size:	
DOC CTRL CHK:			
MFG ENGR CHK:			
QA CHK:	REV	Drawing Number:	Page: 2

Changed by: user118 | Date Changed: | Time Changed:

SAMSUNG CONFIDENTIAL
THIS DOCUMENT CONTAINS CONFIDENTIAL
PROPRIETARY INFORMATION THAT IS
SAMSUNG ELECTRONICS CO'S PROPERTY.
DO NOT DISCLOSE TO OR DUPLICATE FOR OTHERS
EXCEPT AS AUTHORIZED BY SAMSUNG.

MT6789

UCP4000-1

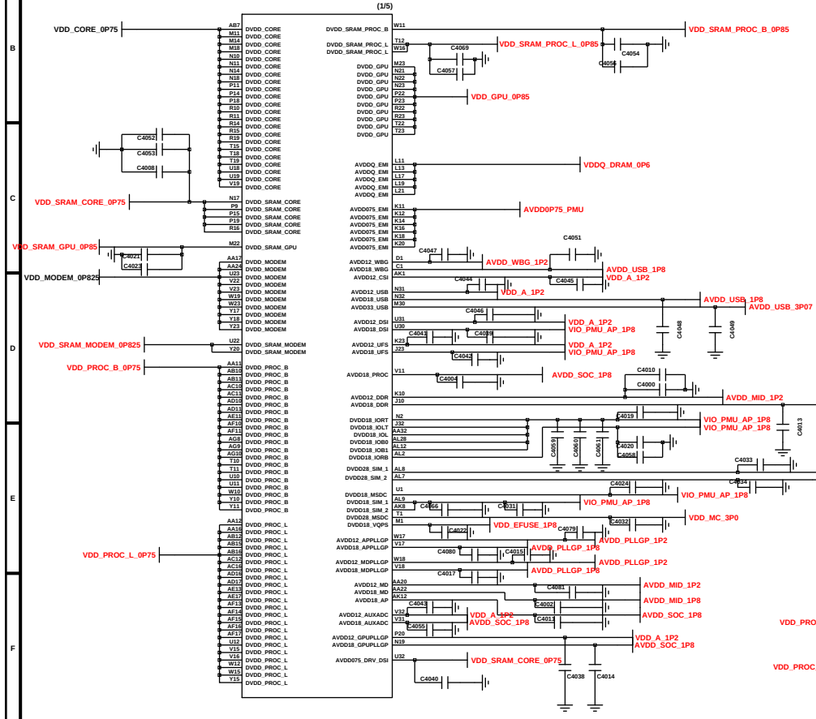

I2C PULL UP

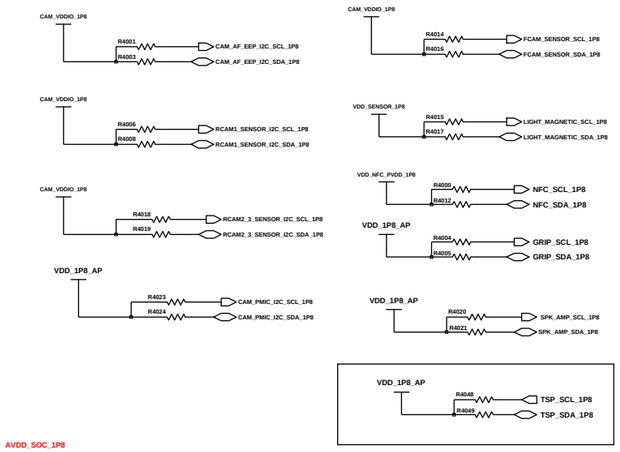

UCP4000-2

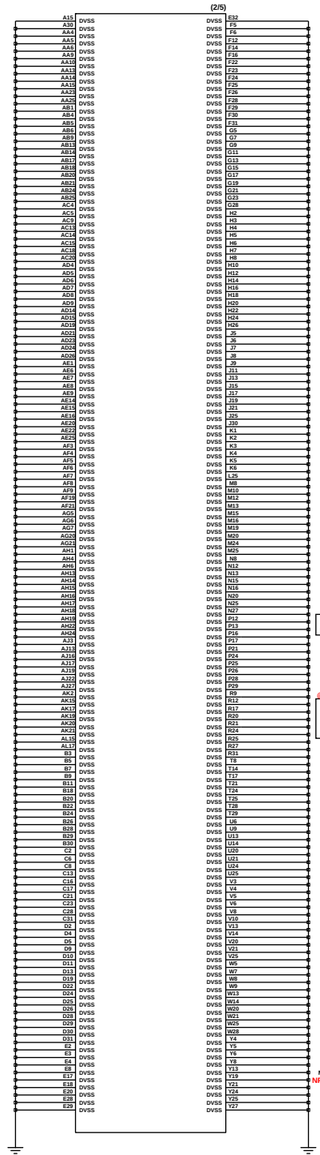

UCP4000-3

	R1	R2	Aux_V	HWID
A237 REV0.0 BringuP	NC	100K	0.05	00
A237 REV0.1 DV1	750K	100K	0.21	01
A24_Bringup_REV0.0	332K	100K	0.42	02
A24_OCTA_REV0.0A	300K	160K	0.62	03
A24_REV0.1(DV1)	120K	100K	0.82	04
A24_REV0.2(DV2)	100K	130K	1.02	05
A24_REV0.3(PV1)	100K	220K	1.24	06
	100K	422K	1.45	
	HHP8447			

(ADC RANGE 0.05 ~ 1.45V)

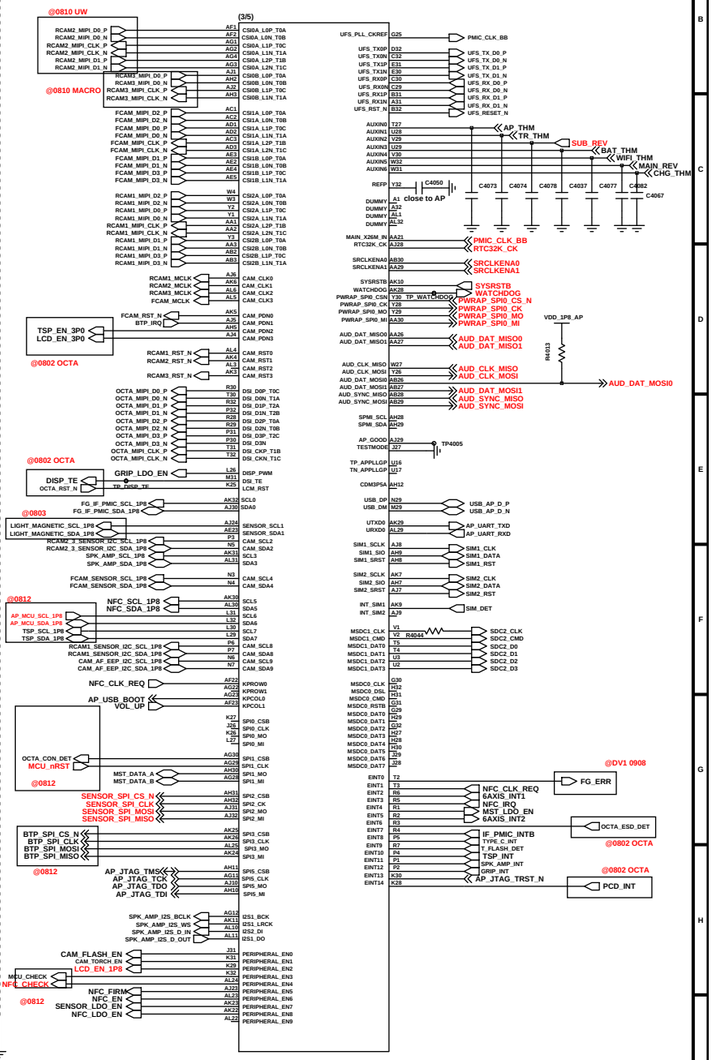

UCP4000-5

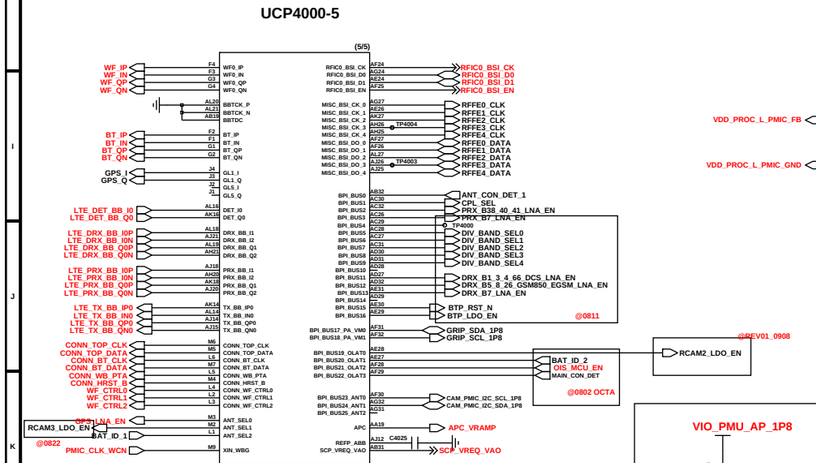

Thermister

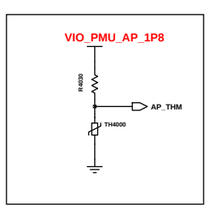

JTAG CON

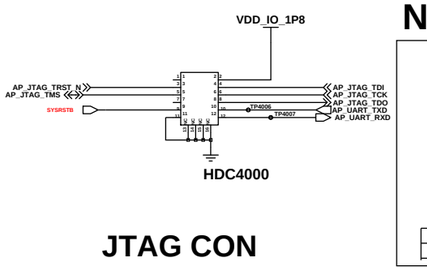

NFC OPTION

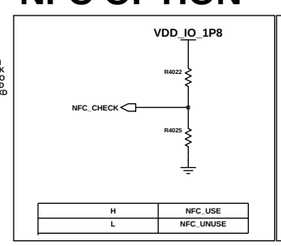

H	NFC_USE
L	NFC_UNUSE

MCU OPTION

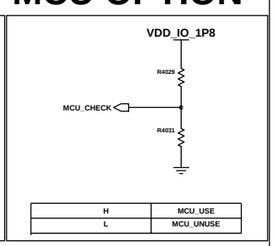

H	MCU_USE
L	MCU_UNUSE

PCB array JTAG

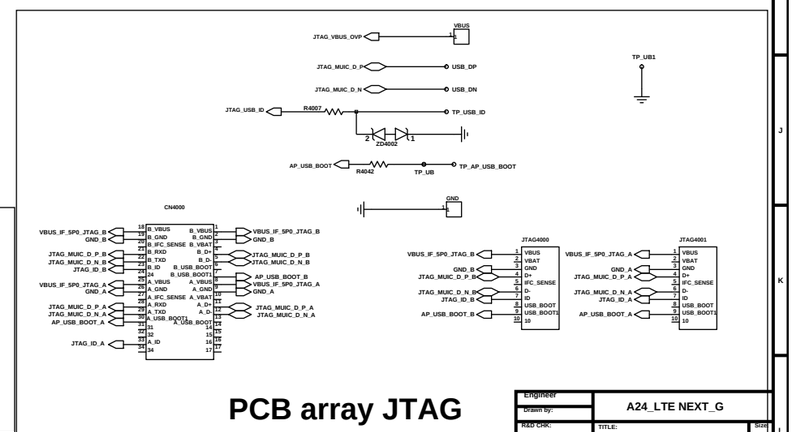

Engineer	
Drawn by:	A24_LTE NEXT_G
R&D CHK:	TITLE:
DOC CTRL CHK:	AP/CP
MFG ENGR CHK:	
QA CHK:	Drawing Number

Changed by: | Date Changed: | Time Changed:

SAMSUNG CONFIDENTIAL
THIS DOCUMENT CONTAINS CONFIDENTIAL PROPRIETARY INFORMATION THAT IS SAMSUNG ELECTRONICS CO'S PROPERTY. DO NOT DISCLOSE TO OR DUPLICATE FOR OTHERS EXCEPT AS AUTHORIZED BY SAMSUNG.

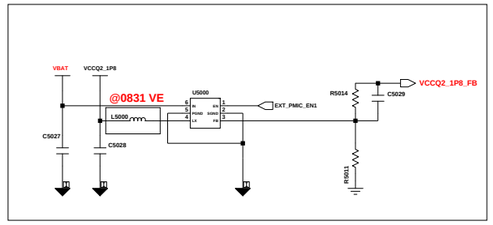

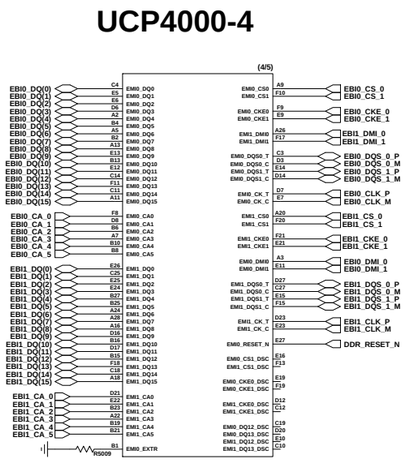

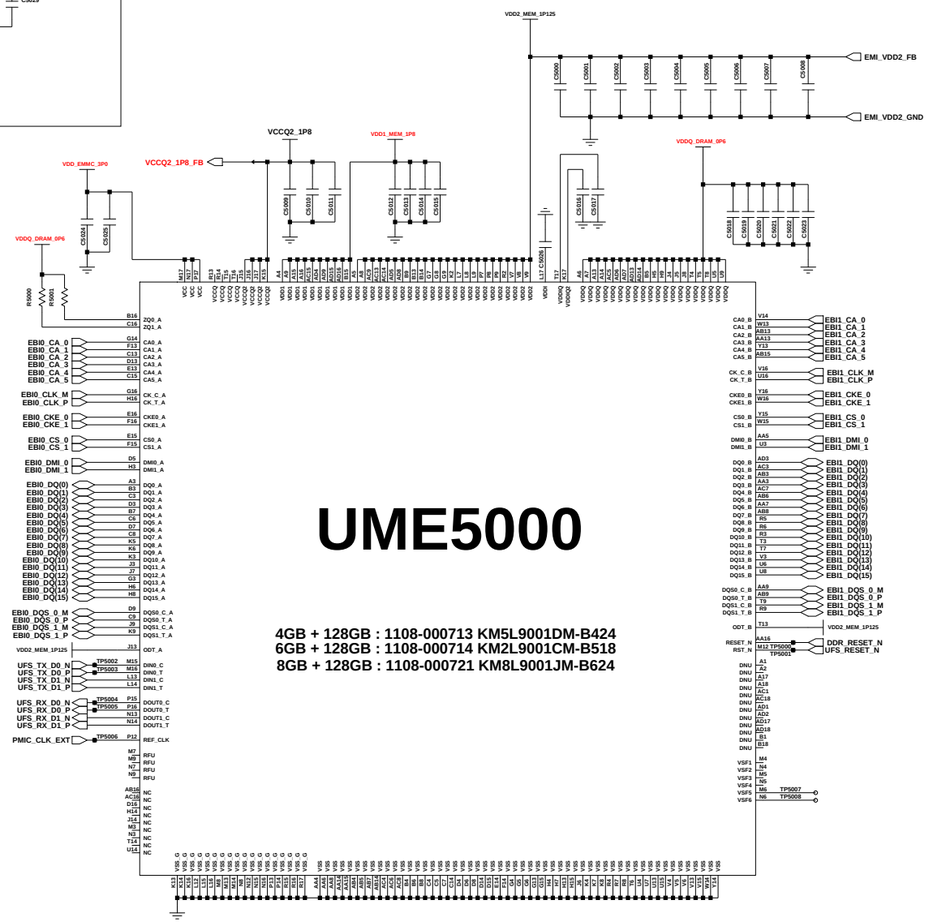

uMCP (LP4x + UFS)

MEMORY

4GB/64GB	R5003 OPEN
1108-000720 KM5P9001DM-B424	
4GB/128GB	R5004
6GB/128GB	R5005 OPEN
8GB/128GB	R5002 OPEN

REGION

GLOBAL_F	R5007
SWA_F_NON_NFC	R5006 OPEN
KOR_N	R5010 OPEN
LA_M	R5008 OPEN

Engineer:	
Drawn by:	A24_LTE NEXT_G
R&D CHK:	
DOC CTRL CHK:	TITLE: AP/CP/uMCP
MFG ENGR CHK:	Size:

Changed by:	Date Changed:	Time Changed:	QA CHK:	REV	Drawing Number:	Page:

SAMSUNG CONFIDENTIAL
THIS DOCUMENT CONTAINS CONFIDENTIAL
AND PROPRIETARY INFORMATION OF
SAMSUNG ELECTRONICS CO'S PROPERTY.
DO NOT DISCLOSE TO OR DUPLICATE FOR OTHERS
EXCEPT AS AUTHORIZED BY SAMSUNG.

PMIC (MT6366)

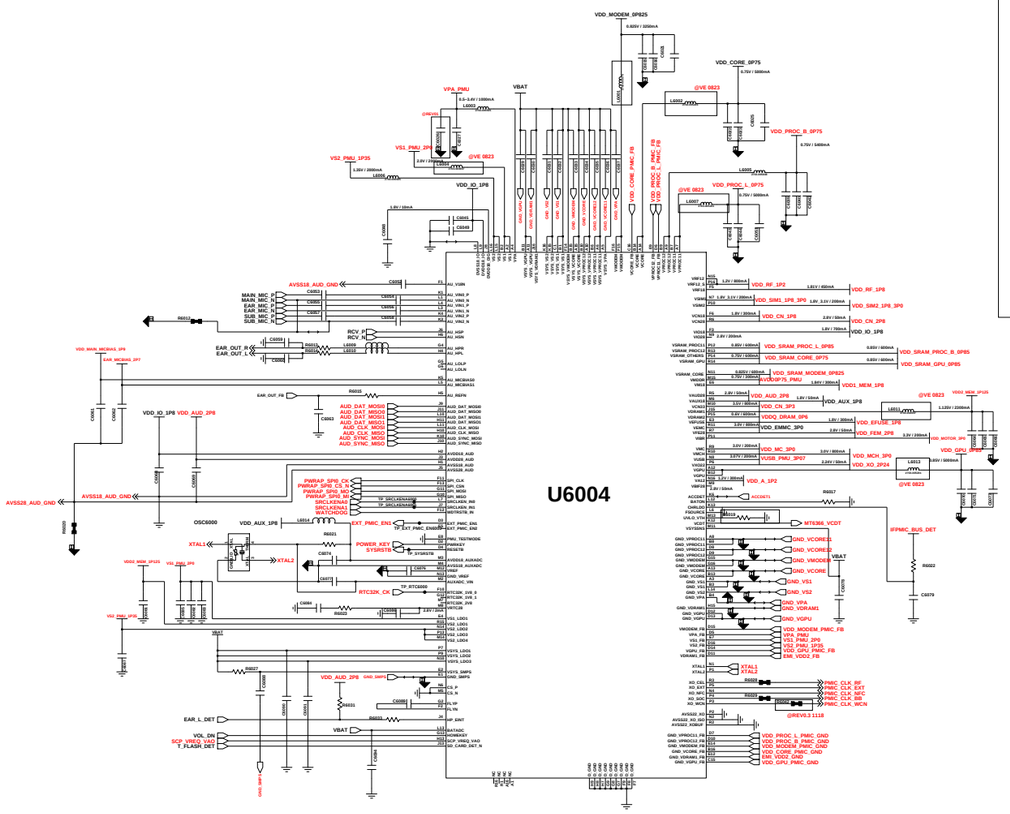

DIRECT CHARGER (HL7132)

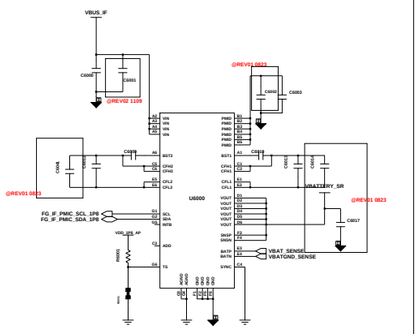

IF_PMIC(SM5714)

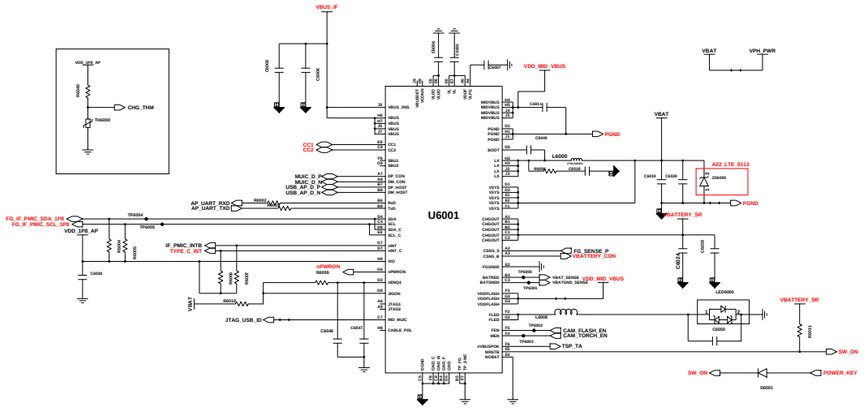

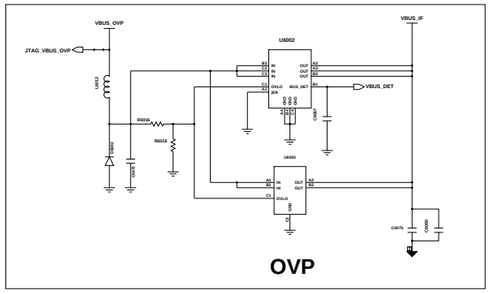

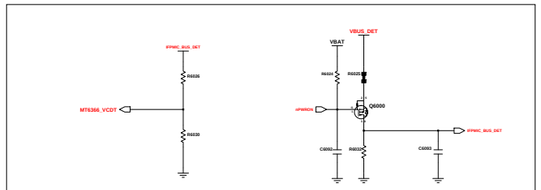

PMIC VCDT

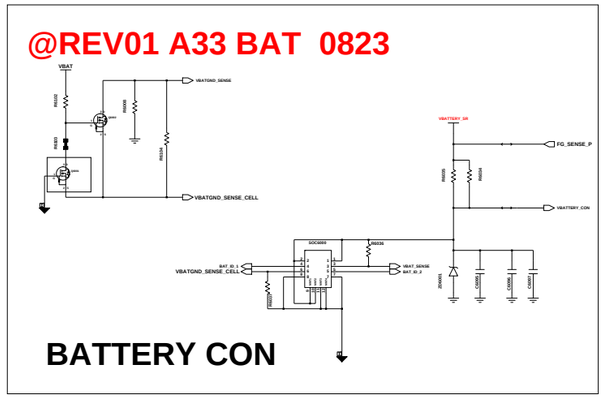

BATTERY CON

PMIC LDO Decap

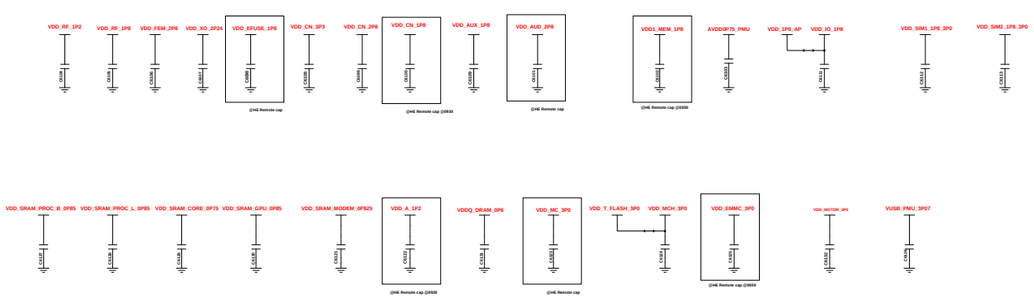

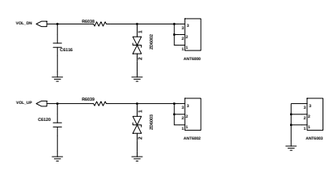

VOL KEY

Engineer:	A24 LTE_NEXT_G
Drawn by:	
R&D CHK:	TITLE: POWER/KEY
DOC CTRL CHK:	
MFG DOCUMENT CHK:	
Changed by: / Date Changed: / Time Changed: / QA CHK:	REV: / Drawing Number:

SAMSUNG CONFIDENTIAL
THIS DOCUMENT CONTAINS CONFIDENTIAL PROPRIETARY INFORMATION THAT IS SAMSUNG ELECTRONICS CO'S PROPERTY. DO NOT DISCLOSE TO OR DUPLICATE FOR OTHERS EXCEPT AS AUTHORIZED BY SAMSUNG.

AUDIO & SENSOR PART

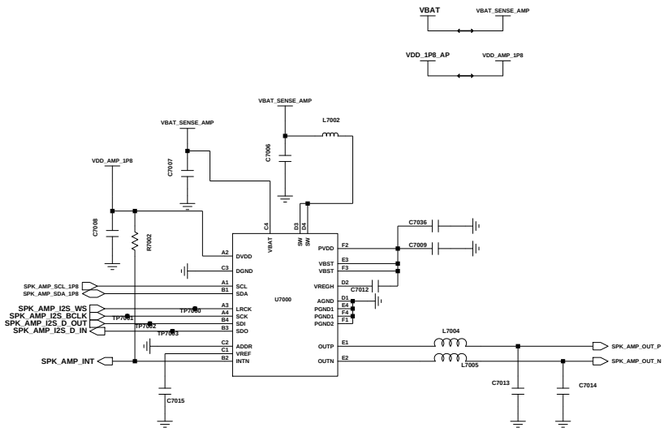

SPK AMP

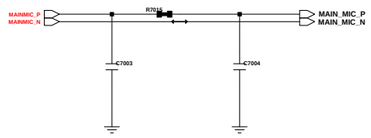

MAIN MIC

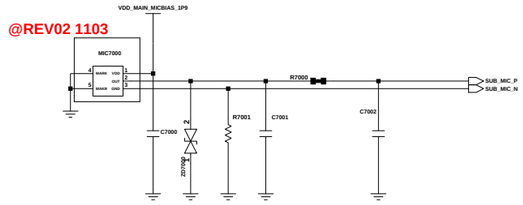

2nd MIC

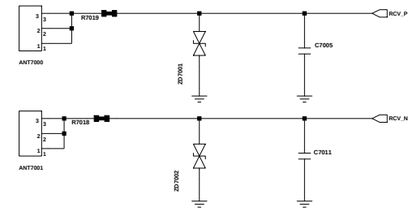

RCV CONTACT

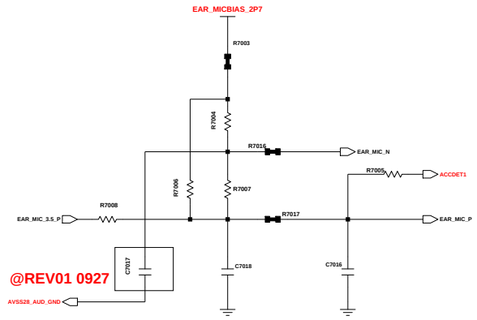

EAR MIC

SENSOR

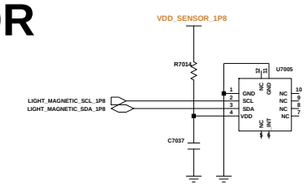

AMBIENT SENSOR

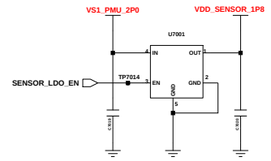

SENSOR LDO

DUAL SIM / T-FLASH (3in3)

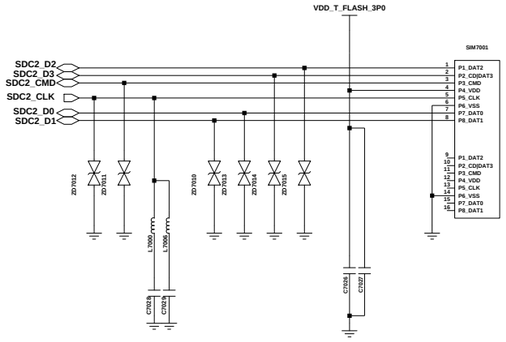

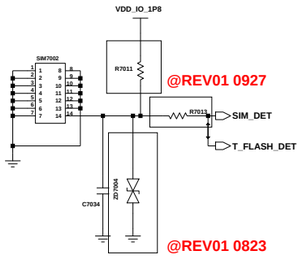

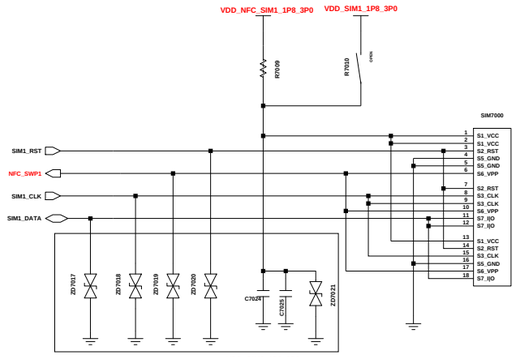

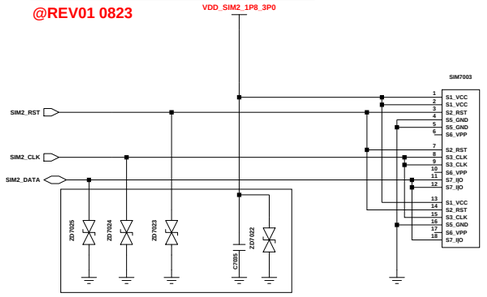

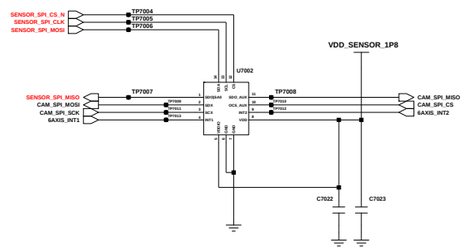

ACC&GYRO SENSOR

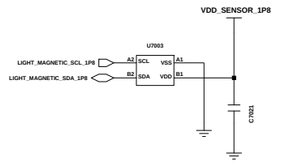

MAGNETIC SENSOR

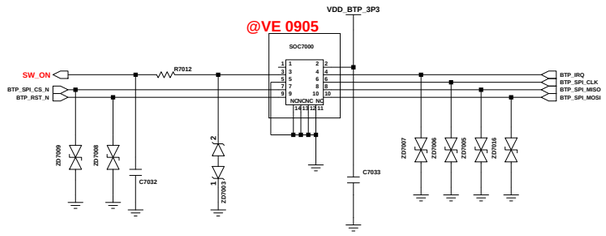

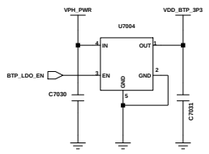

PWR & SIDE FPS

Engineer:		A24 LTE_NEXT_G	
Drawn by:			
R&D CHK:		TITLE:	Size:
DOC CTRL CHK:		AUDIO/SIM&SD/SENSOR	
MFG ENGR CHK:			
Changed by:	Date Changed:	Time Changed:	QA CHK:
REV:	Drawing Number:	Page:	

SAMSUNG CONFIDENTIAL
THIS DOCUMENT CONTAINS CONFIDENTIAL
PROPRIETARY INFORMATION THAT IS
SAMSUNG ELECTRONICS CO'S PROPERTY.
DO NOT DISCLOSE TO OR DUPLICATE FOR OTHERS
EXCEPT AS AUTHORIZED BY SAMSUNG.

CAMERA

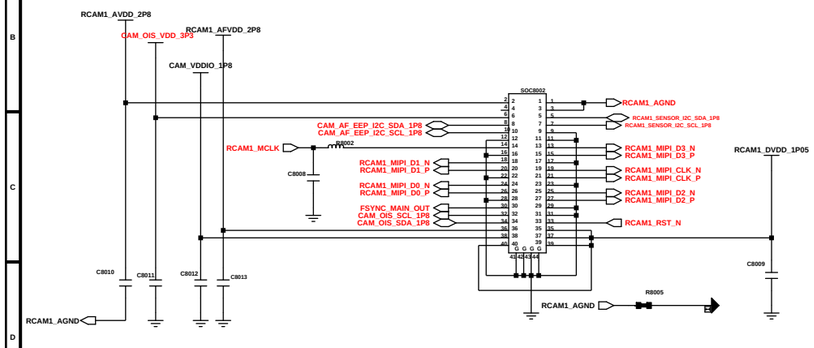

RCAM1_50M(OIS_40PIN)

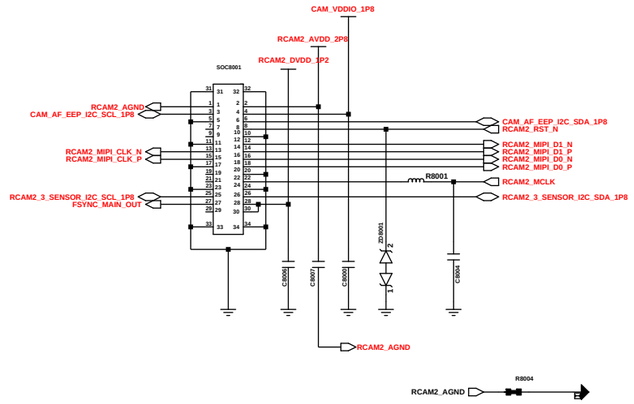

RCAM2_5M_UW (30pin)_GC5035

COPY FROM SM-A12_LTE

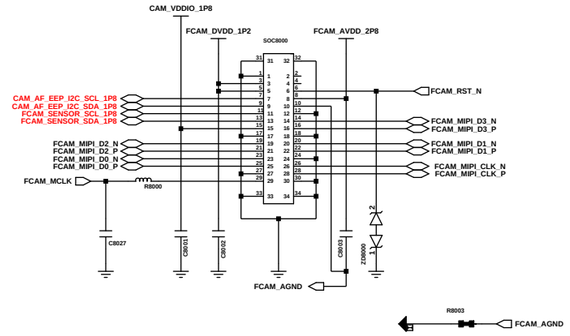

FRONT_13M CAMERA
(NEW - IMX258)

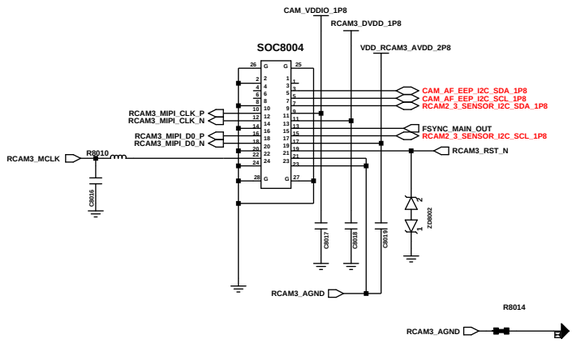

RCAM2_2M_MACRO (24pin)_GC02M1

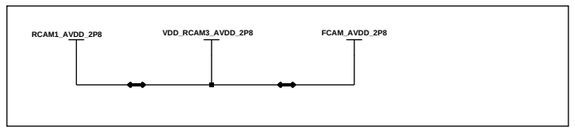

@0810 CAM

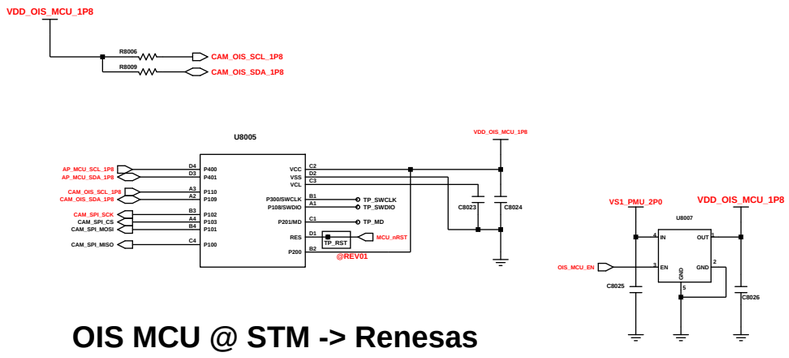

OIS MCU @ STM -> Renesas

CAM PMIC

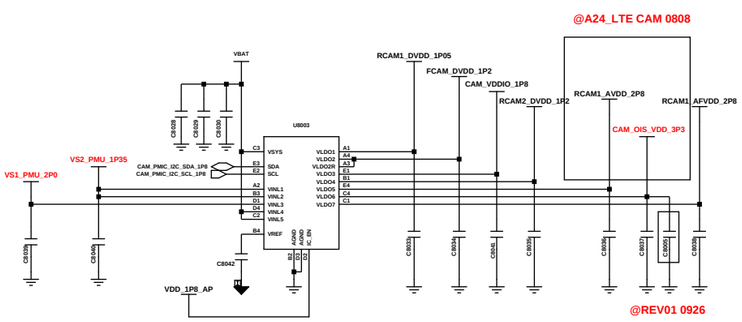

COPY FROM SM-A13_LTE

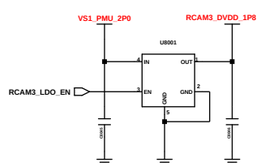

RCAM3_DVDD

@DV1 0908

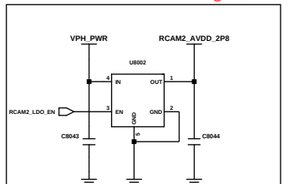

RCAM2_AVDD

Engineer:	A24 LTE_NEXT_G
Drawn by:	
R&D CHK:	TITLE: CAMERA
DOC CTRL CHK:	Size:
MFG ENGR CHK:	
QA CHK:	REV: Drawing Number: Page: 78

Changed by: | Date Changed: | Time Changed:

SAMSUNG CONFIDENTIAL
THIS DOCUMENT CONTAINS CONFIDENTIAL PROPRIETARY INFORMATION THAT IS SAMSUNG ELECTRONICS CO'S PROPERTY. DO NOT DISCLOSE TO OR DUPLICATE FOR OTHERS EXCEPT AS AUTHORIZED BY SAMSUNG.

C2C (Conn to Conn FPCB)

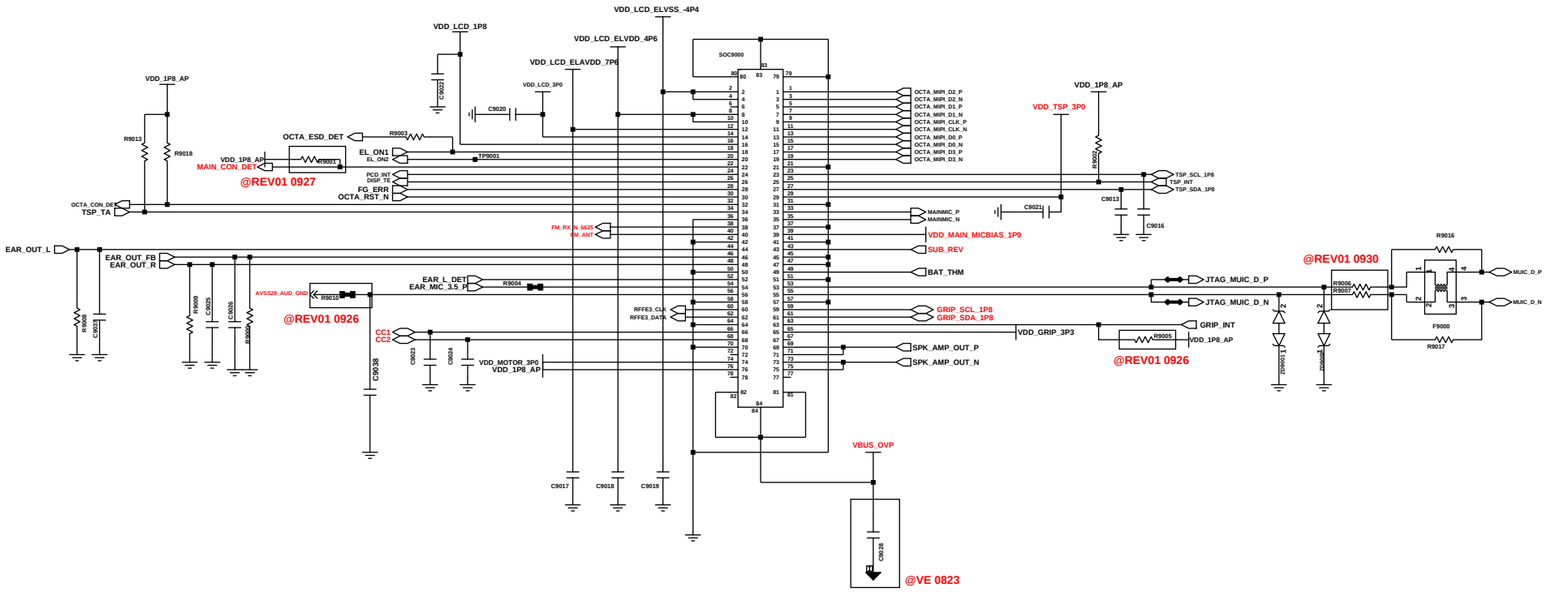

DISPLAY

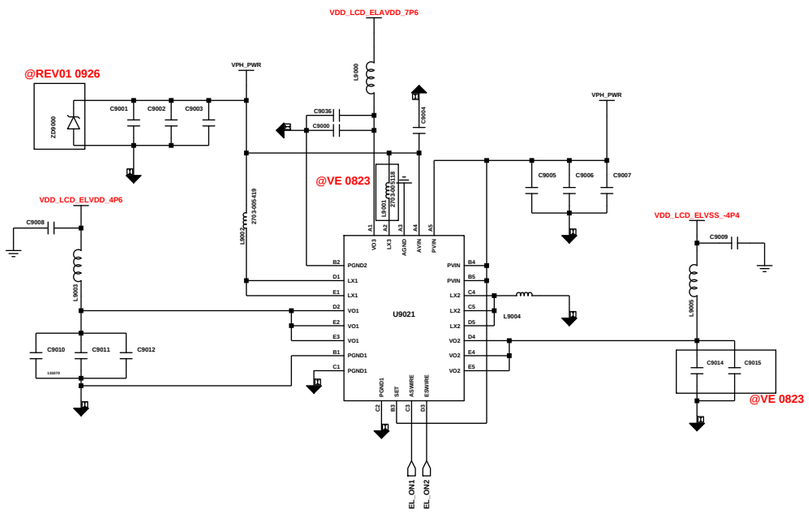

OCTA DCDC

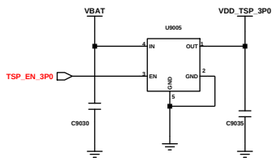

TSP LDO

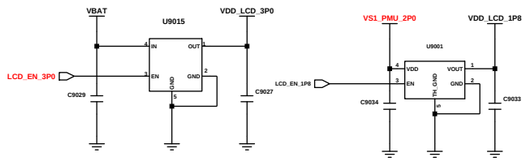

LCD LDO

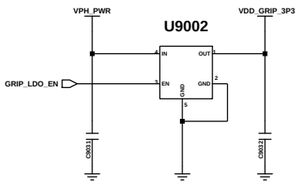

GRIP SENSOR LDO

SHIELD CAN/BOTH HOLE

2D BARCODE

AP

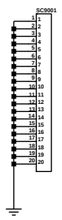

MEM

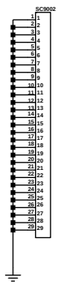

RF

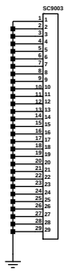

PMIC

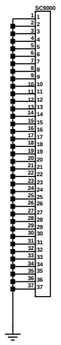

Engineer:	A24 LTE_NEXT_G
Drawn by:	
R&D CHK:	TITLE: MAIN CON / OCTA DCDC
DOC CTRL CHK:	
MFG ENGR CHK:	
QA CHK:	REV: Drawing Number: Page:

Changed by: user28 | Date Changed: Thursday, June 18, 2015 | Time Changed: 10:18:28 am

SM-A245F/M
Common

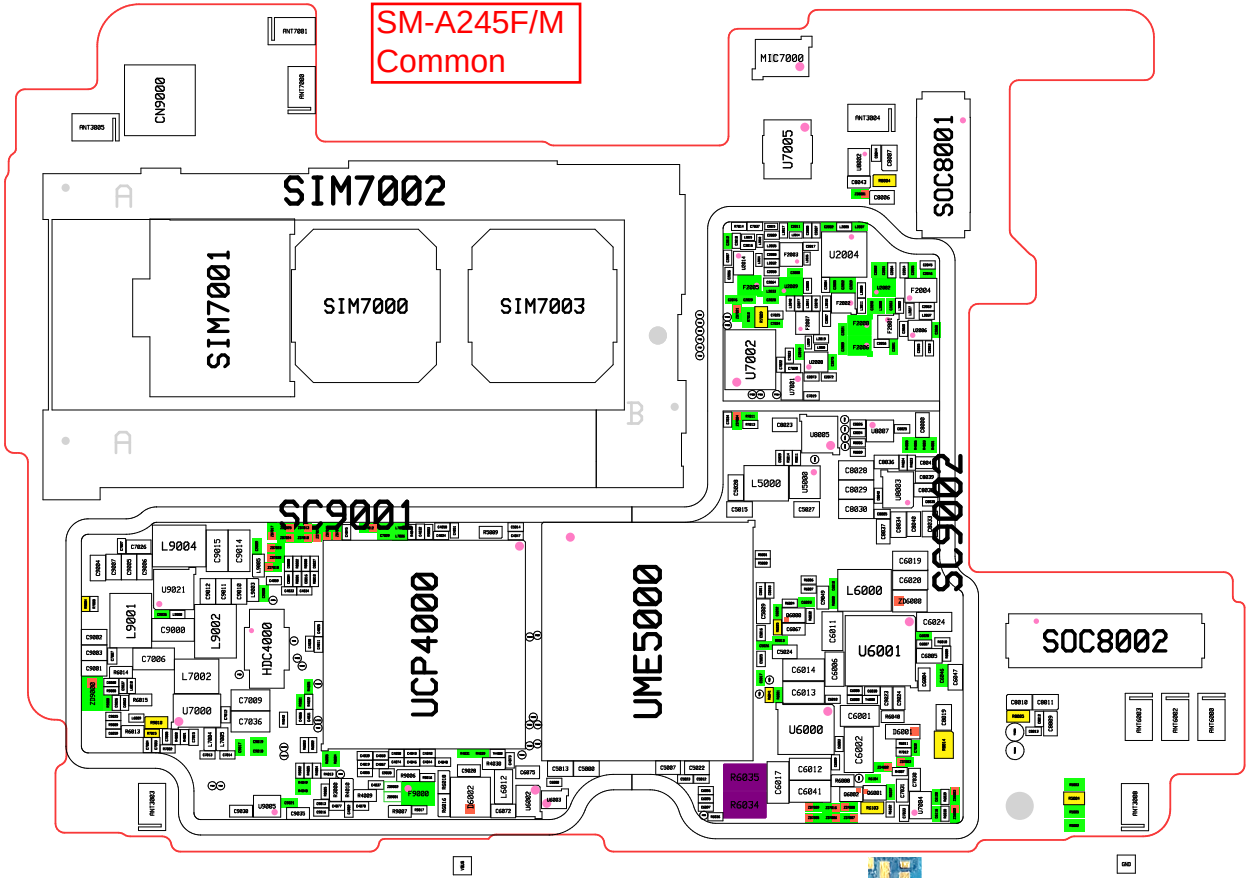

Q6001 : soldering in the same direction as the figure
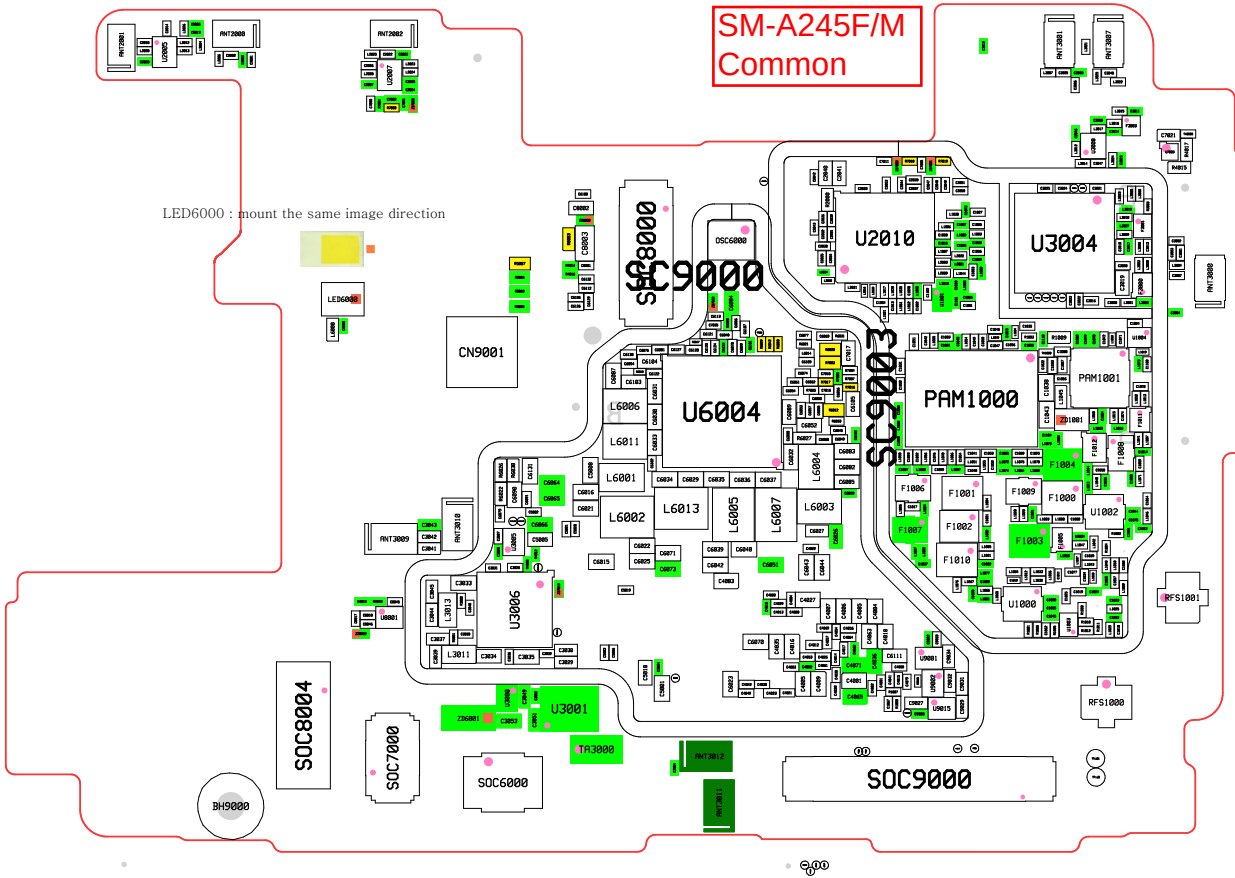
SM-A245F/M
Common